Datasheet

ABI80L Optical Encoder System

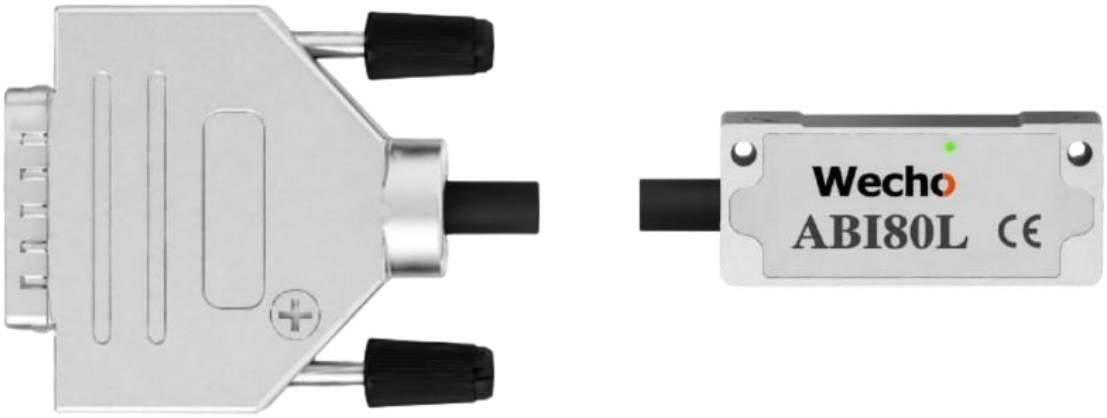

Highlights

Optical Readhead	• Non-contact optical incremental encodera • Industry-standard TTL output signals (**Up to 0.1 µm resolution**) • Integrated Automatic Gain Control (**AGC**) for optimal signal strength • Supports selectable index positions using an Index Mark Selector, ideal for long-travel applications • Suitable for high-precision applications • Compact design optimized for integration into space-constrained systems • Easy installation with an integrated LED for convenient setup and status indication

This document is subject to change without prior notice. For any inquiries or customization requests, please contact our sales team at info2@wechosys.com.

1. Specifications

Optical Readhead		
Image		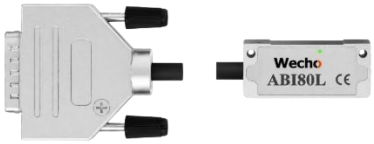
Series		**ABI80L**
Description		Recommended for long-stroke linear motion, equipped with a Hall sensor for multiple indexing selection
Scanning Principle		Optical (Reflective)
Scanning Type		Incremental
Signal Period		80 µm
Output Signal		TTL
Resolution	**TTL**	0.5 µm (160X angle steps per period) 0.2 µm (400X angle steps per period) 0.1 µm (800X angle steps per period)
Power Supply (Without Load)	**5 V ±10%**	<90 mA (Typical)
Temperature	**Storage**	-20 °C to +70 °C @ RH < 80% (Non-condensing)
	Operating	0 °C to +70 °C @ RH < 80% (Non-condensing)
Acceleration	**Operating**	500 m/s^2, 3 Axes
Shock	**Non-Operating**	<1000 m/s^2, 6 ms, ½ Sine, 3 Axes
Vibration	**Operating**	<100 m/s^2 Max @ 55 to 2000 Hz, 3 Axes
Mass	**Readhead**	9.5 g
	Cable	25 g/m
Cable Design		10 Cores, Double Shielded
Cable Diameter		3.5±0.2 mm
Cable Bend Radius	**Static**	30 mm
	Dynamic	70 mm
Cable Termination		DSUB 15 Male
Readhead Dimension	**Length**	33.0 mm
	Width	13.75 mm
	Height	8.5 mm
IP Rating		IP40

2. Speed Performance

2.1 TTL Output Signal

2.1.1 Linear Motion

2.1.1.1 Minimum Edge Separation: 50 ns

Interpolator Factor	Angle Steps per Period	Resolution (µm)	Max Speed (m/s)
40X	160X	0.5	**8**
100X	400X	0.2	**4**
200X	800X	0.1	**2**

2.1.1.2 Minimum Edge Separation: 200 ns

Interpolator Factor	Angle Steps per Period	Resolution (µm)	Max Speed (m/s)
40X	160X	0.5	**1.8**
100X	400X	0.2	**0.7**
200X	800X	0.1	**0.4**

3. LED Definition

Model		ABI801
LED Location		On readhead body 
LED Colour	**Green**	Optimal signal quality
	Green (Blinking)	Passing through the selected index mark
	Amber	Warning / Error

4. Readhead Dimension Drawing

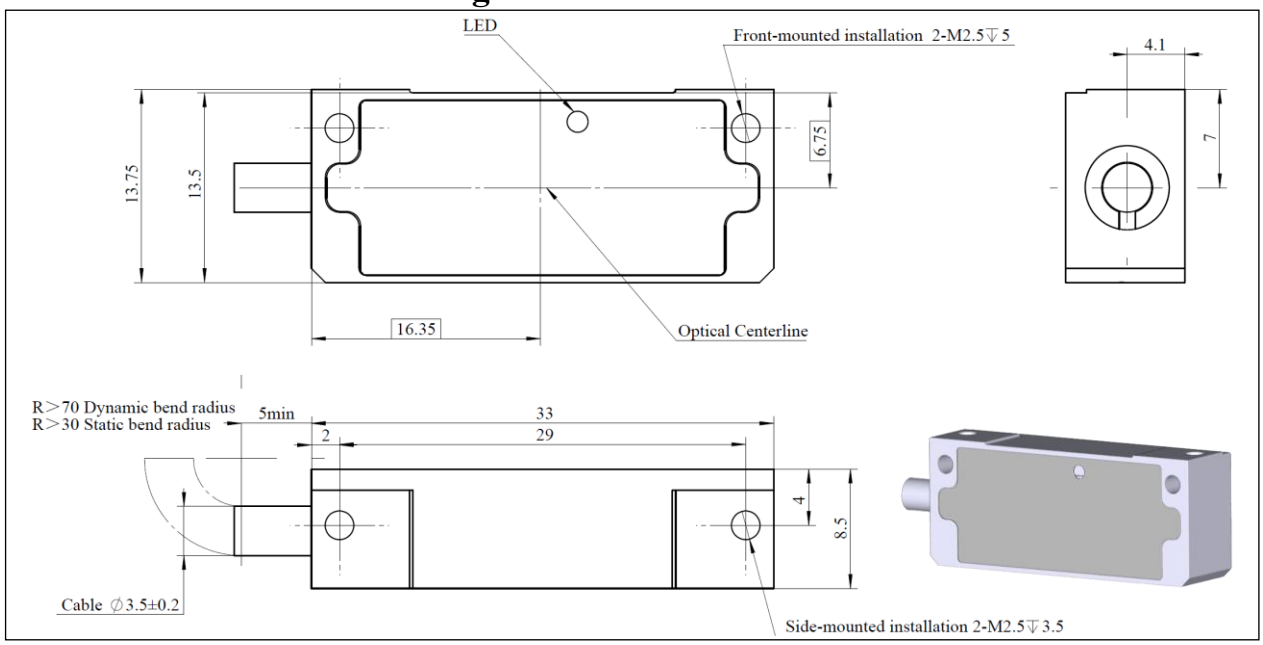

Note:

1. All dimensions are in mm.
2. Only one installation method may be selected: front mounting or side mounting. When front mounting is used, ensure that the bracket design does not obstruct the LED indicator.

5. Readhead Installation Guide

During installation, please strictly follow or refer to the diagrams below to ensure accuracy and consistency. Pay close attention to the cable exit direction, as well as the definitions and labels of yaw, pitch, and roll. Proper understanding and application of these orientations are critical for precise assembly, calibration and future operation.

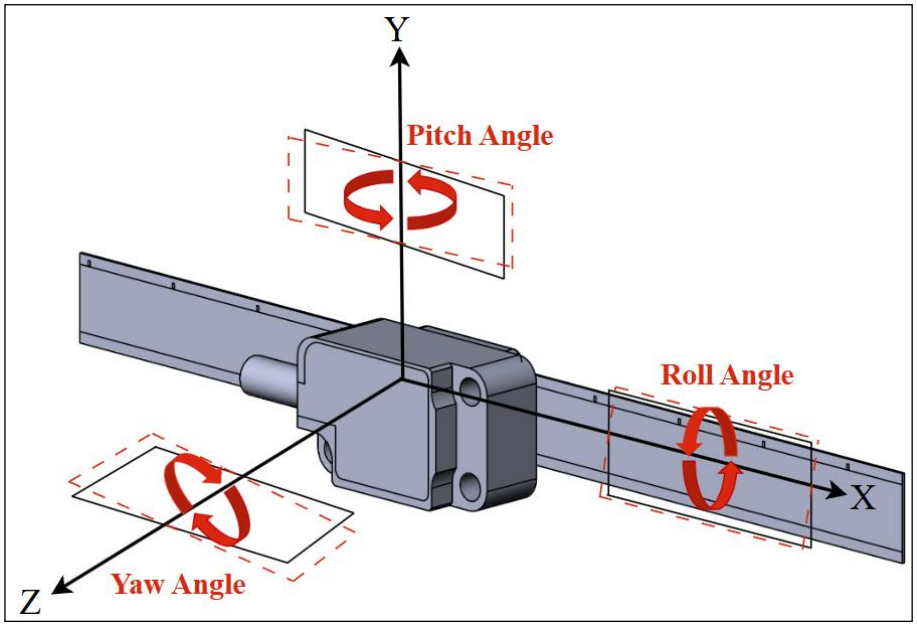

5.1 Stainless Steel Scale with Adhesive (SI80-SS)

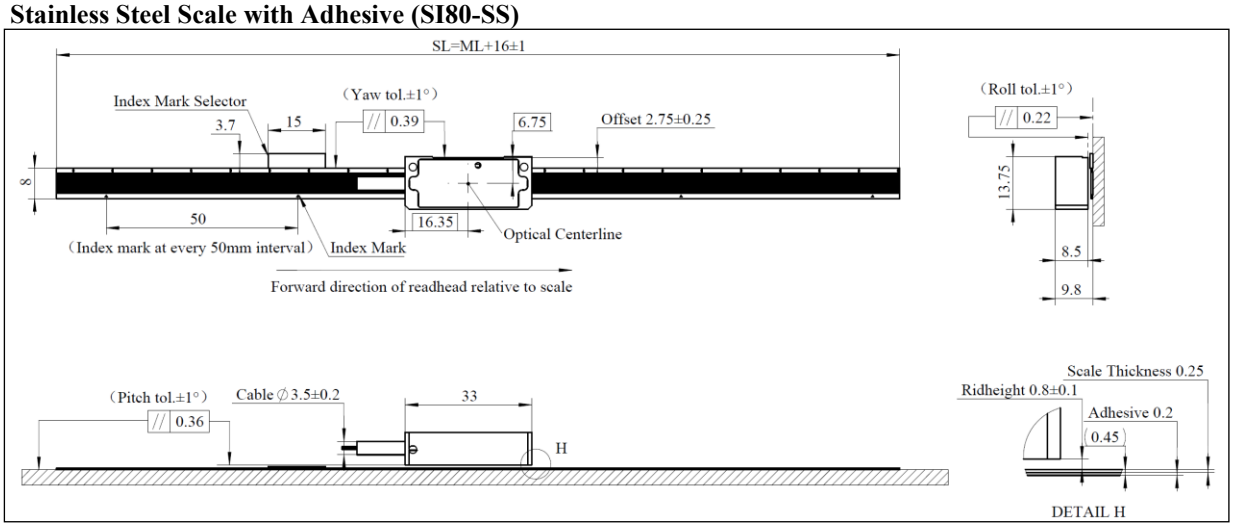

Note:

1. All dimensions are in mm.
2. SL = Scale length
3. ML = Measuring length
4. △ = Index mark
5. Ensure the correct installation direction for the scale.
6. Ensure the north pole of the index mark selector (magnet) is facing upward.

6. Electrical Connection

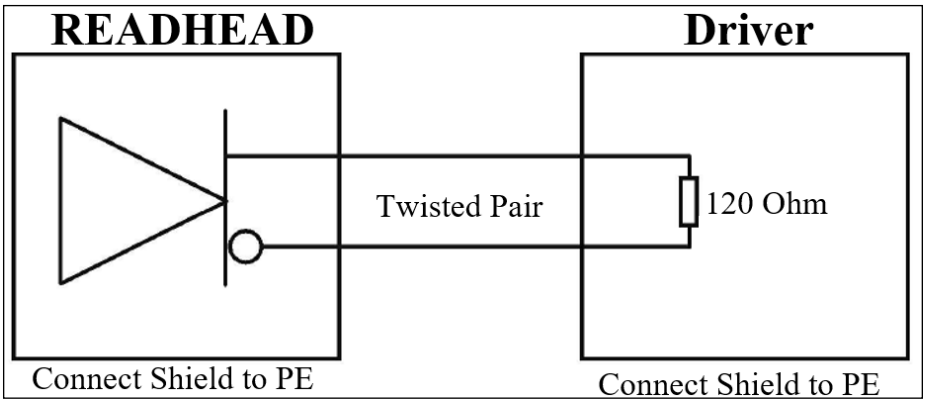

IMPORTANT: Readhead shield must be connected to the driver earth (Field ground).
Maximum readhead cable length: 3 m

7. Pinout

7.1 TTL Output Signal

Connector	Pinout	Signal	Function	Colour
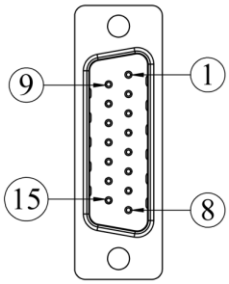 **Type:** DSUB 15 Male **Jack Screws:** UNC 4-40 **Mating Recommendation** **Type:** DSUB 15 Female **Hex Extender:** UNC 4-40, 6 mm	**Pin 1**	A+	TTL A+ signal	Blue
	Pin 2	0 V	Encoder supply (0 V)	Black
	Pin 3	B+	TTL B+ signal	Grey
	Pin 4	VCC	Encoder supply (5 V)	Red
	Pin 5	NC	Not connected	-
	Pin 6	NC	Not connected	-
	Pin 7	I-	Index- signal	Green
	Pin 8	NC	Not connected	-
	Pin 9	A-	TTL A- signal	Violet
	Pin 10	0 V Sensor	Encoder supply (0 V)	Brown
	Pin 11	B-	TTL B- signal	White
	Pin 12	VCC Sensor	Encoder supply (5 V)	Amber
	Pin 13	NC	Not connected	-
	Pin 14	I+	Index+ signal	Yellow
	Pin 15	NC	Not connected	-
	Case	Outer Shield	Outer Shield	-

8. Output Specifications

8.1 TTL Output Signal

Incremental 2 channels A and B in quadrature (90° phase shifted)

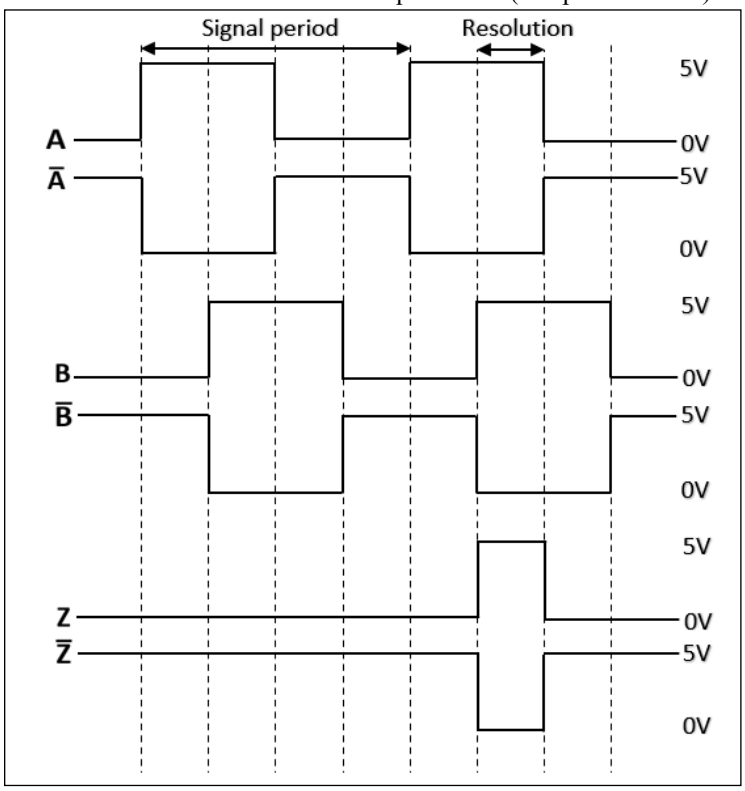

9. Model Name

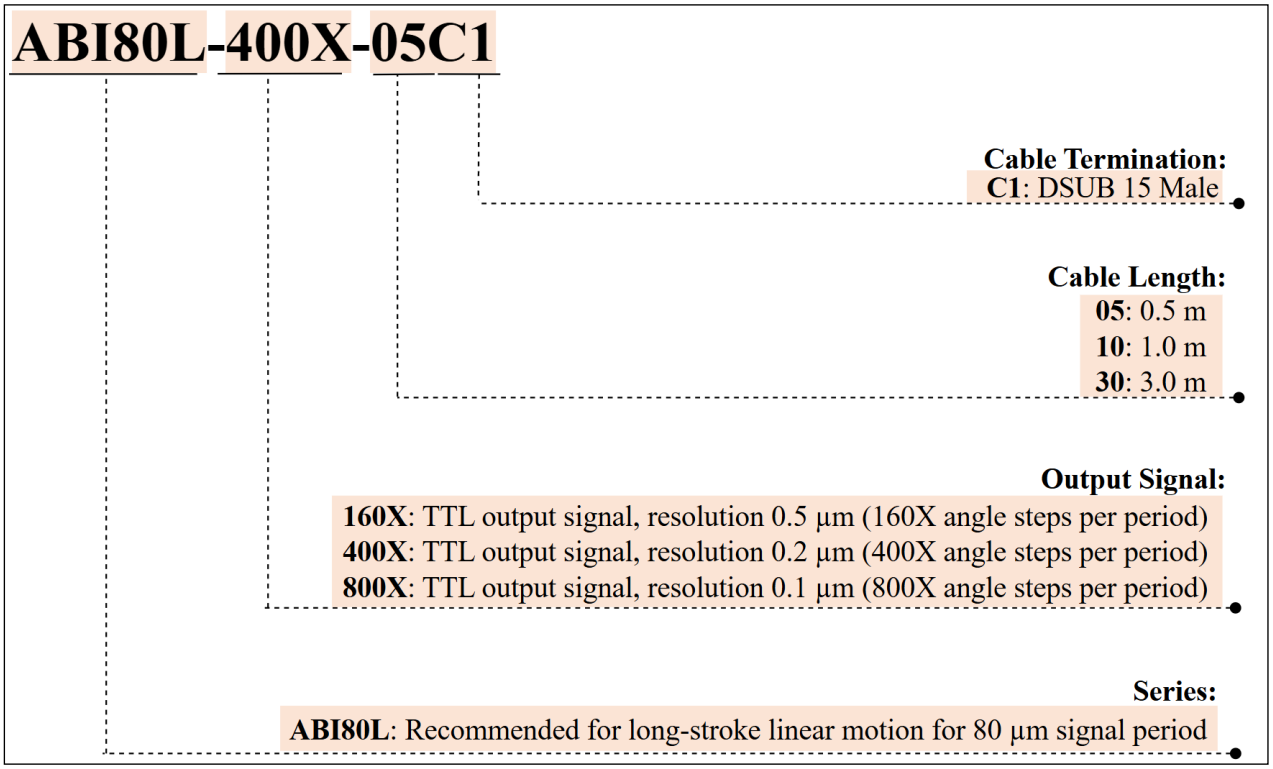

Note:

1. For customization, please contact our sales team for more information.

10. Compatible Scale/Disc

Type	Model	Description
Scale	SI80-SS	Linear incremental 80 µm grating period, stainless steel with adhesive, up to 40 m
Disc	Not recommended	If needed, please contact our sales team

11. Accessories List

Part Number	Image	Description
N/A	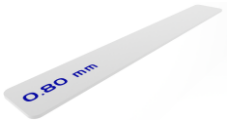	**0.80 mm Shim Kit** is used during readhead assembly to precisely adjust the rideheight between the readhead and the scale, ensuring optimal signal quality. By using the appropriate shims, the required rideheight can be accurately achieved, preventing signal degradation and enhancing the overall performance of the readhead. **** Included in every readhead***
408396-01		**SI80-SS (when used with the ABI80L model) scale applicator tool** is used to accurately and efficiently assemble scale to the readhead's measuring surface, ensuring they are properly aligned and securely attached, which is crucial for the encoder system to deliver precise and reliable motion measurements.
908083-01		**Index mark selector** allows the readhead to accurately locate the index mark by detecting it as the readhead moves past in the incremental measuring system. **** Included in every readhead***

12. Introduction to Similar Products

Model	Image	Description
ABI80		Miniature readhead, supports short-stroke linear and rotary motion, suitable for compact systems